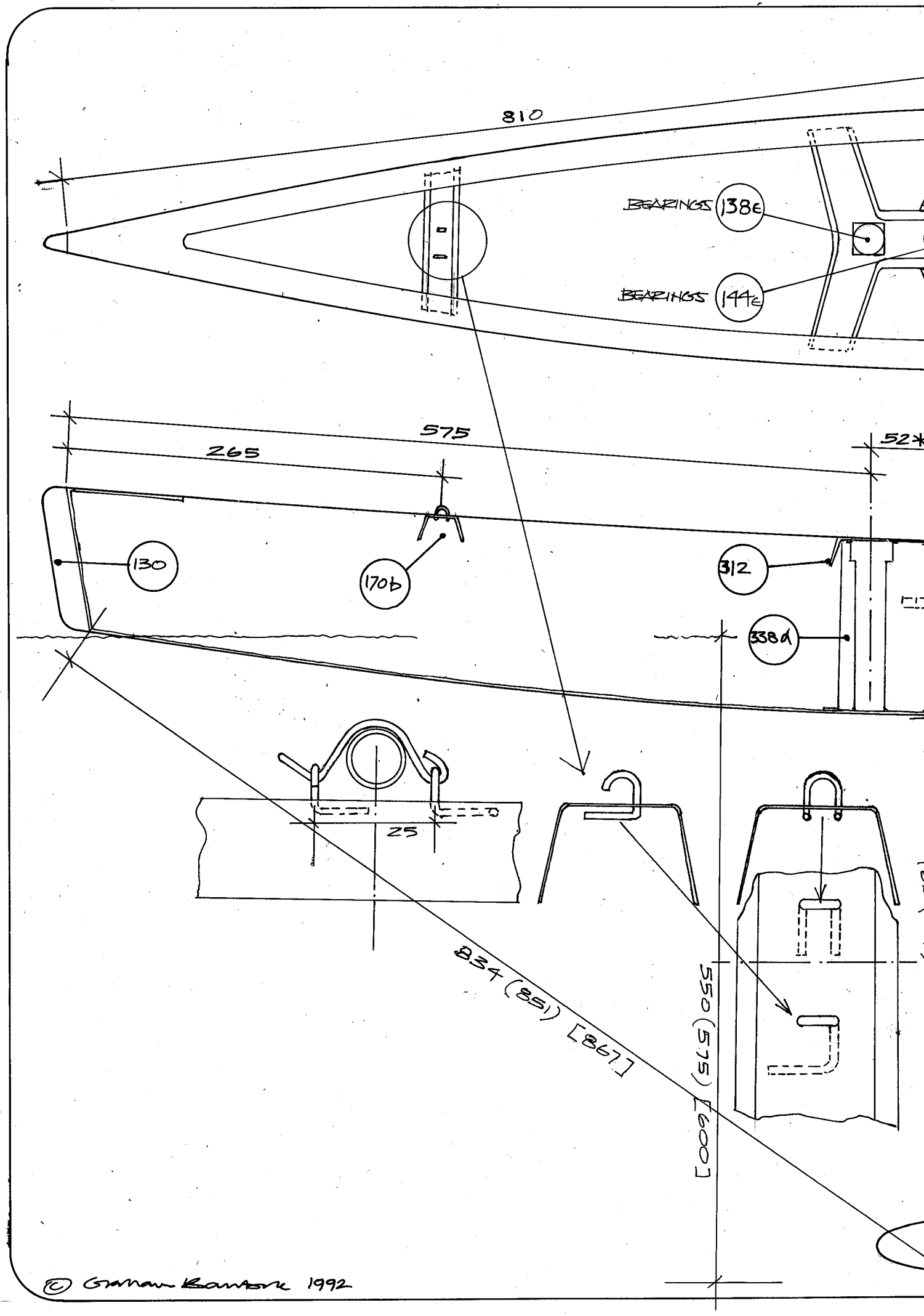

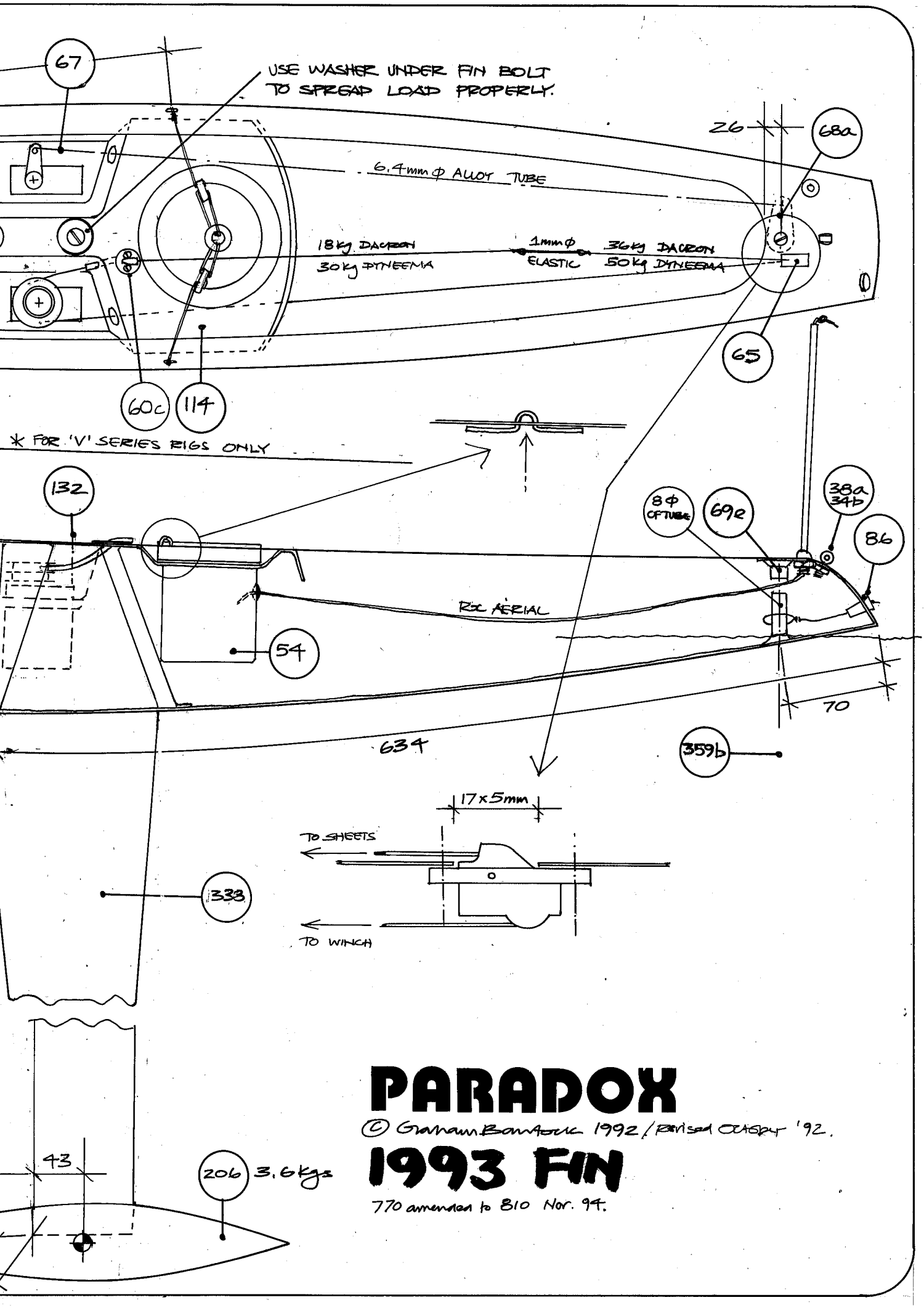

PARADOX

© Graham Bamford 1992 / Revised October '92.

1993 FIN

770 amended to 810 Nov. 94.